## C–Board Schematics (CT–27SF12T/T1; CT–2742SFT/T1; & CT–F29L7T/LT/VT)

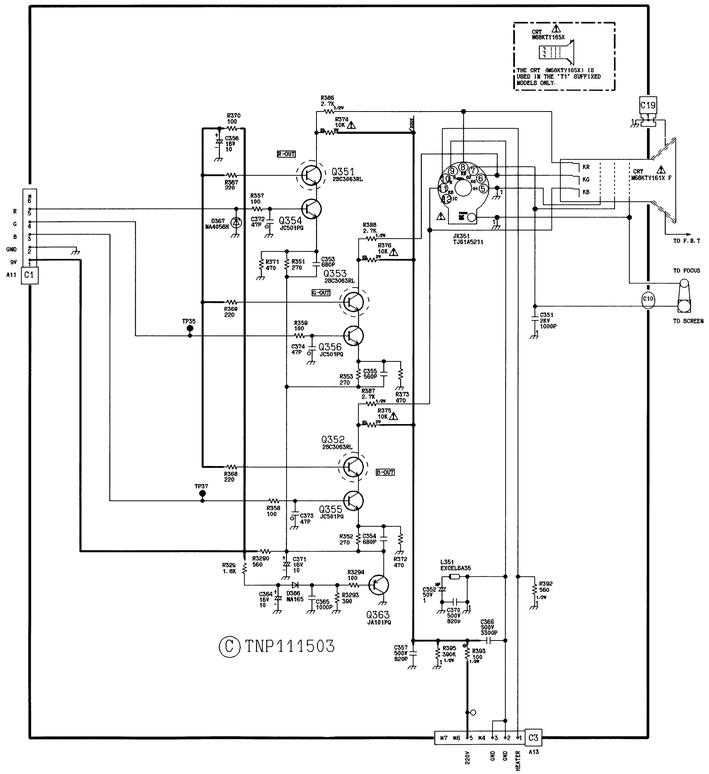


## Voltage Chart – CRT–Board

(CT–27SF12T;CT–F29L7T/LT/VT;CT–2742SFT)

### Transistors

| Ref. | b | c | e |
|---|---|---|---|
| Q351 | 8.8 | 158.0 | 8.4 |
| Q352 | 8.8 | 164.7 | 8.4 |
| Q353 | 8.8 | 160.5 | 8.4 |
| Q354 | 2.7 | 8.4 | 2.4 |
| Q355 | 2.6 | 8.4 | 2.2 |
| Q356 | 2.7 | 8.4 | 2.3 |
| Q363 | 1.4 | 0 | 2.1 |

## C–Board Schematics (CT–27XF12CT)

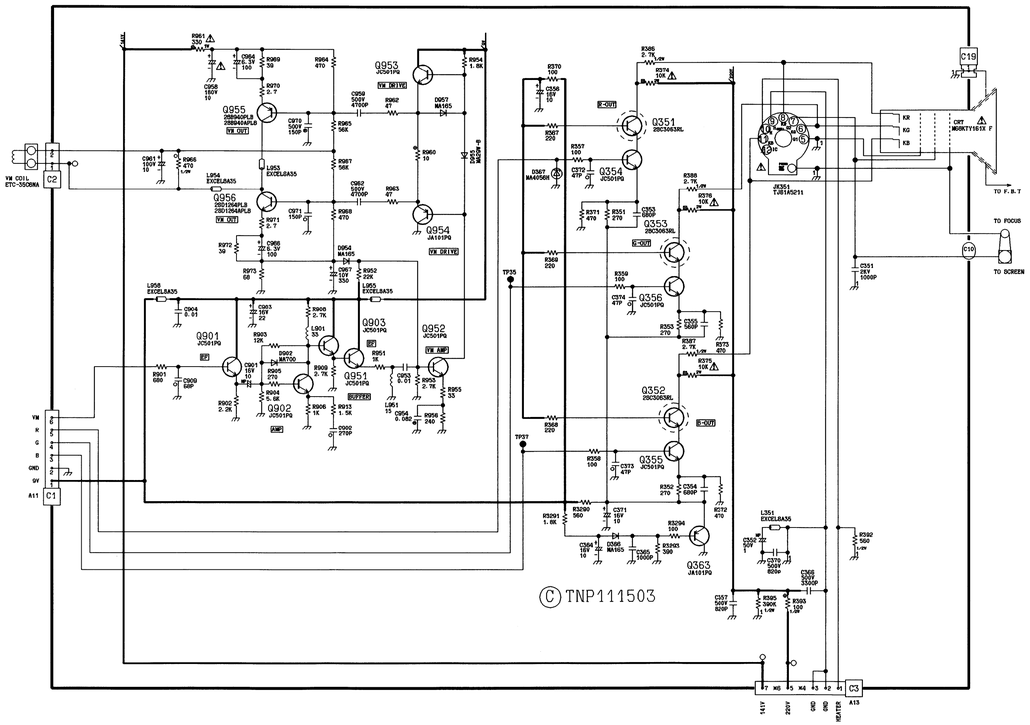


## Voltage Chart – CRT–Board

(CT–27XF12CT)

### Transistors

| Ref. | b | c | e |
|---|---|---|---|
| Q351 | 8.7 | 143.6 | 8.4 |
| Q352 | 8.7 | 151.1 | 8.4 |
| Q353 | 8.7 | 154.7 | 8.4 |
| Q354 | 3.0 | 8.4 | 2.6 |
| Q355 | 2.8 | 8.3 | 2.4 |
| Q356 | 2.7 | 8.4 | 2.4 |
| Q363 | 1.4 | 0 | 2.1 |
| Q901 | 5.5 | 8.8 | 4.8 |
| Q902 | 1.6 | 5.2 | 1.0 |
| Q903 | 5.2 | 8.8 | 4.6 |
| Q951 | 4.5 | 8.8 | 3.9 |
| Q952 | 0.9 | 5.4 | 0.3 |
| Q953 | 6.6 | 8.8 | 6.0 |
| Q954 | 5.4 | 0 | 6.0 |
| Q955 | 137.6 | 69.9 | 138.0 |
| Q956 | 0.8 | 69.9 | 0.4 |

**IMPORTANT SAFETY NOTICE**

THIS SCHEMATIC DIAGRAM INCORPORATES SPECIAL FEATURES THAT ARE IMPORTANT FOR PROTECTION FROM X–RADIATION, FIRE AND ELECTRICAL SHOCK HAZARDS. WHEN SERVICING IT IS ESSENTIAL THAT ONLY MANUFACTURERS SPECIFIED PARTS BE USED FOR THE CRITICAL COMPONENTS DESIGNATED WITH A ⚠ IN THE SCHEMATIC.